Radiant Pool Standard Specification

Step Detail Page	8′ Radius Wedding Cake Step	52″ Wall Height
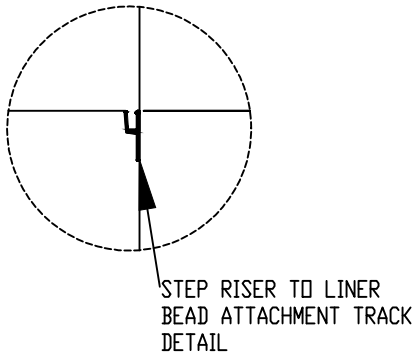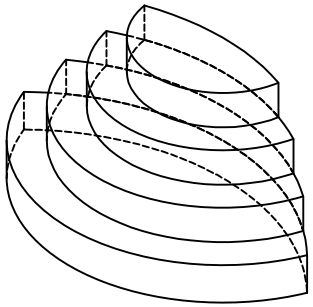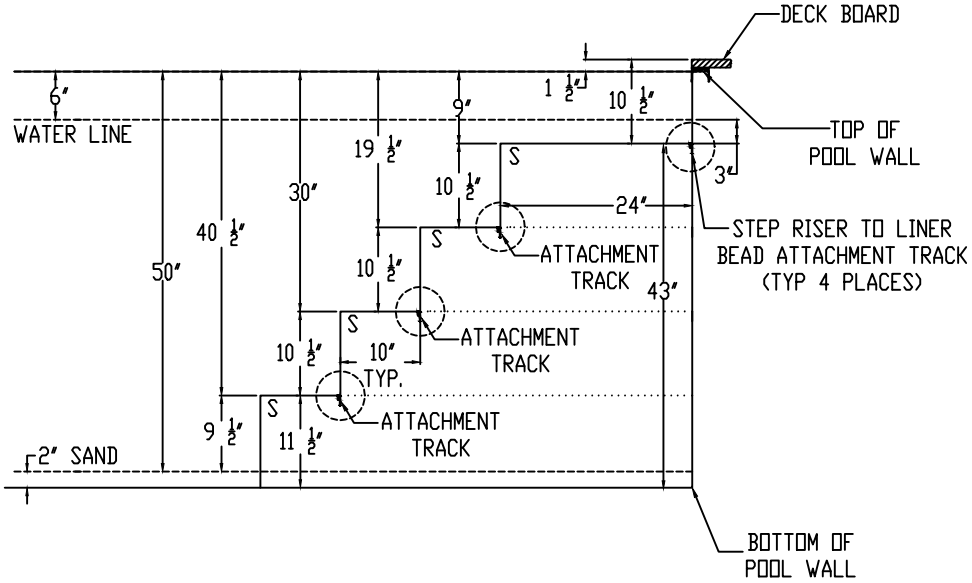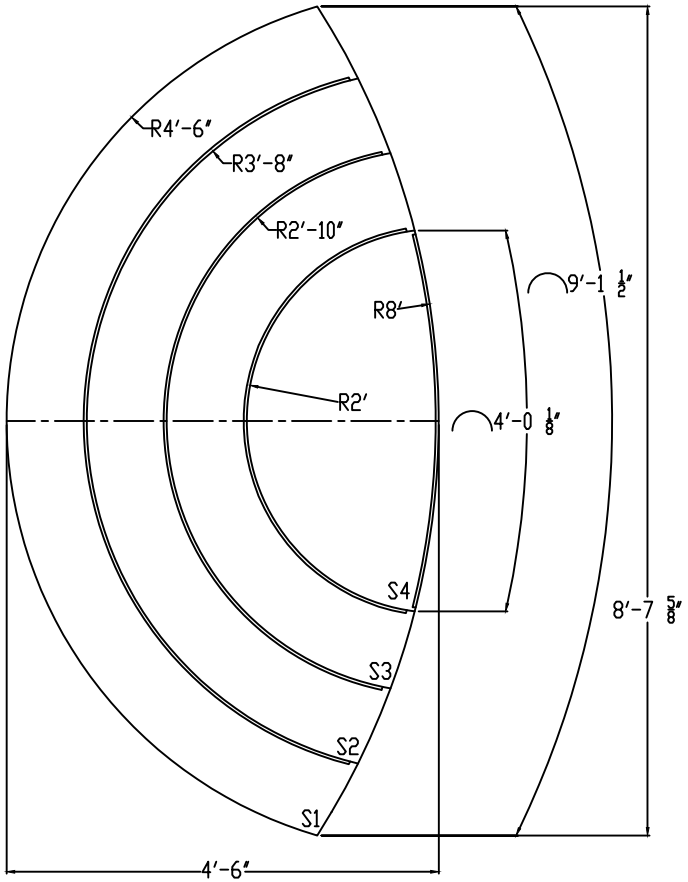
LINER'S FEATURED WITH BEAD ATTACHMENT