Radiant Pool Standard Specification

Step Detail Page	6′ Radius Wedding Cake Step	52″ Wall Height

LINER'S FEATURED WITH BEAD ATTACHMENT

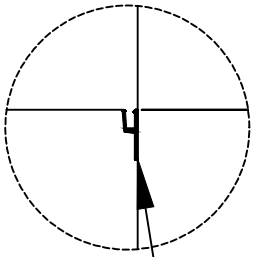
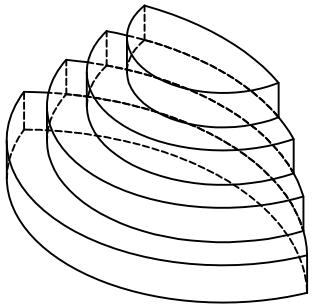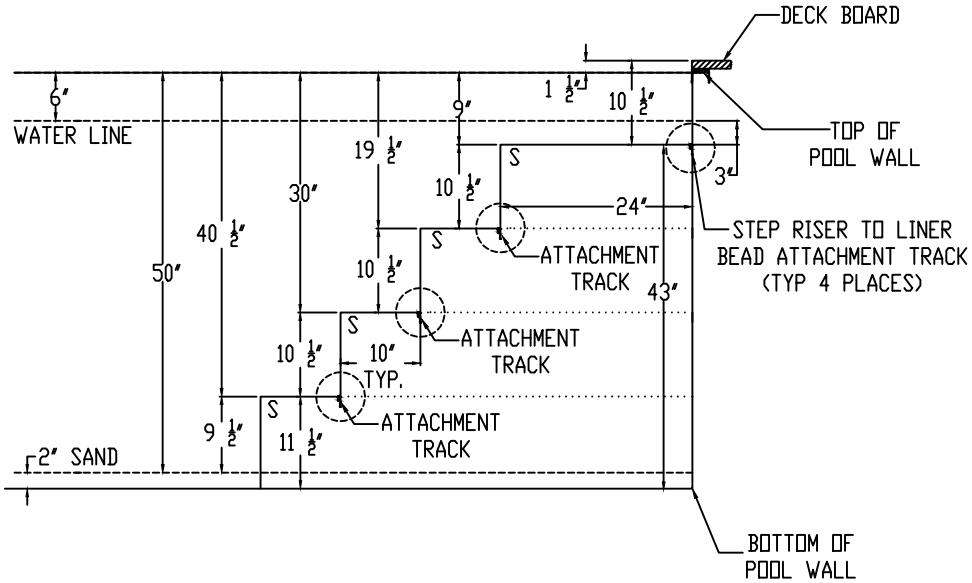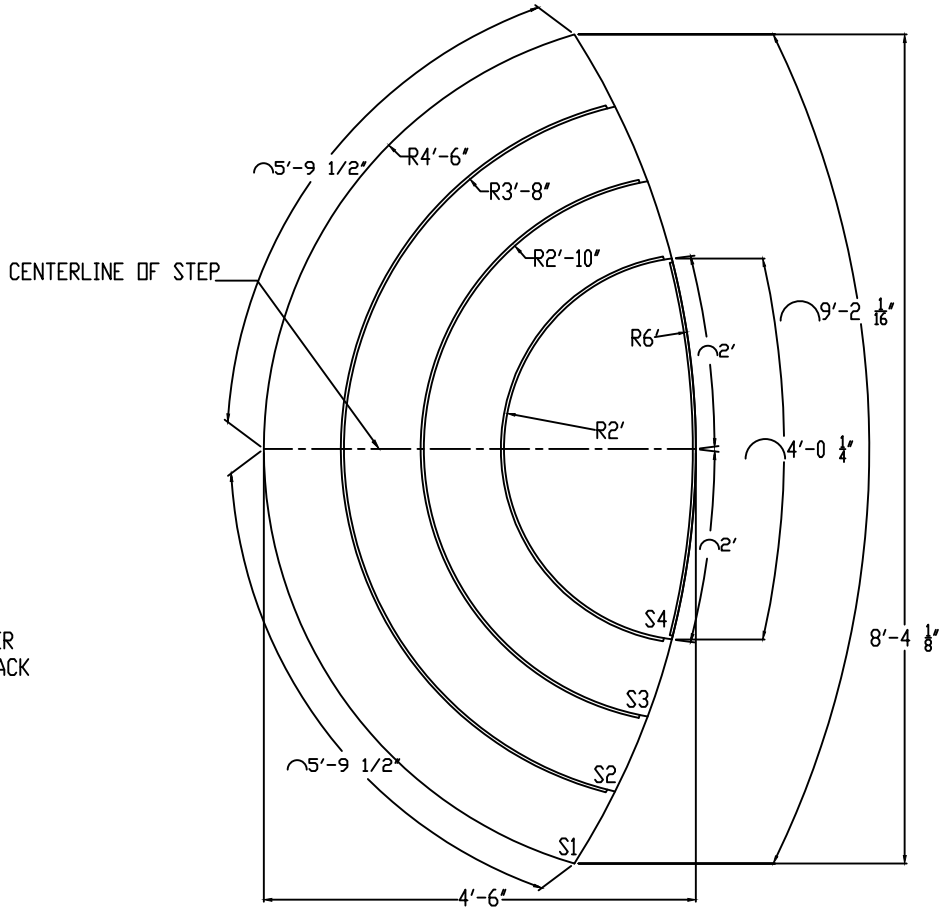
STEP RISER TO LINER BEAD ATTACHMENT TRACK DETAIL