Radiant Pool Standard Specification

Step Detail Page	10′-6″ Radius Wedding Cake Step	52″ Wall Height

LINER'S FEATURED WITH BEAD ATTACHMENT

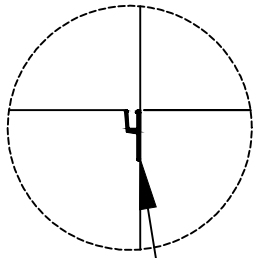
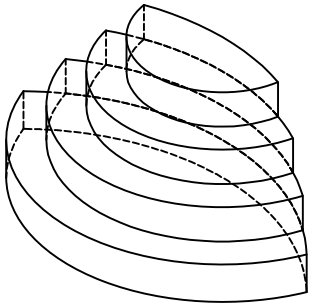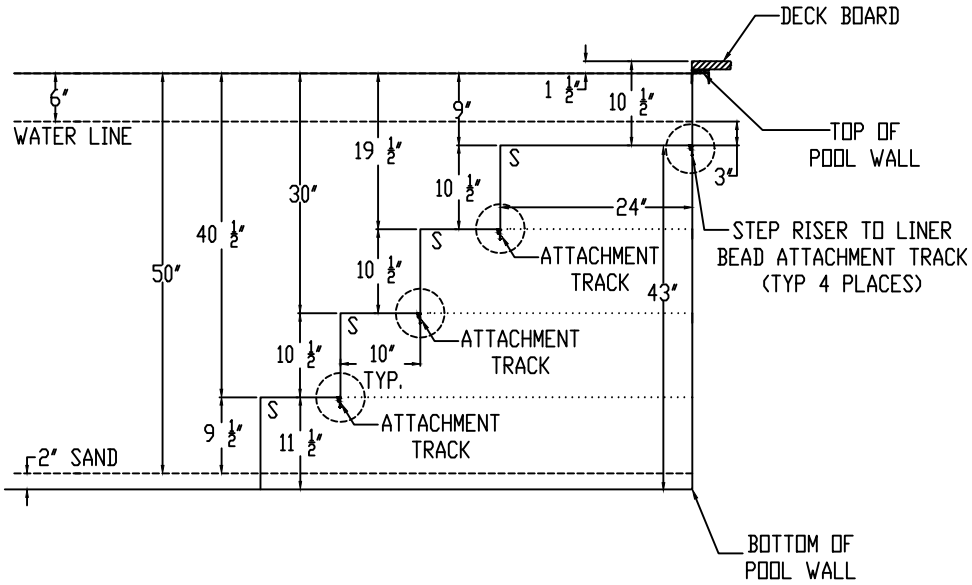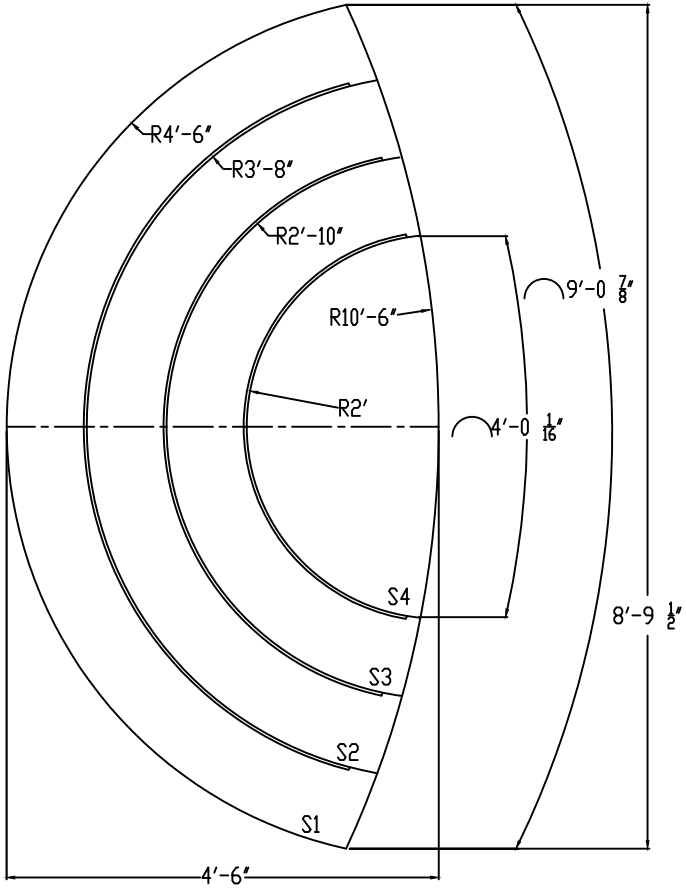
STEP RISER TO LINER
BEAD ATTACHMENT TRACK
DETAIL